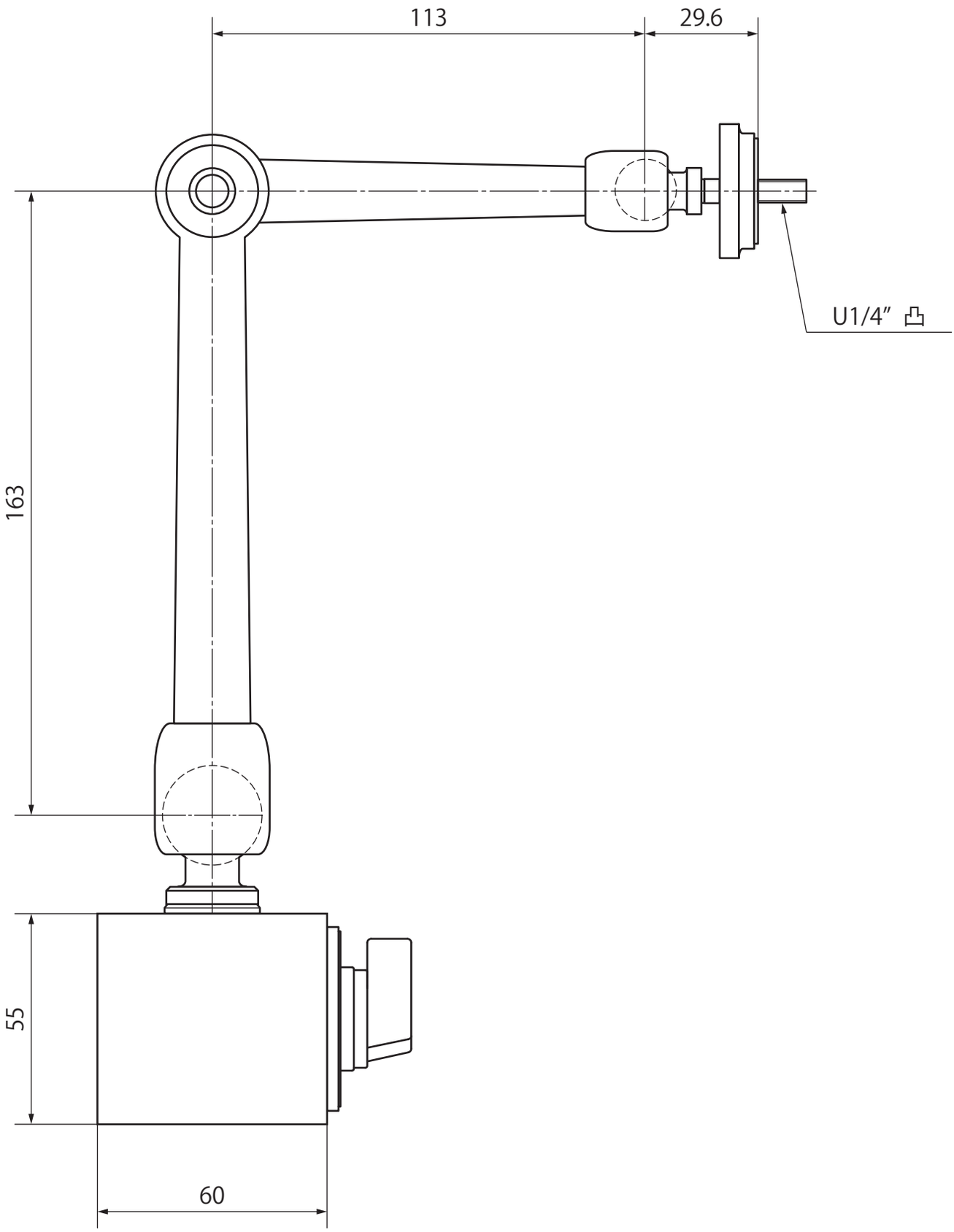
113
29.6
U1/4″
163
55
60